ECD500 DIFFUSER WITH CONNECTOR'S

IF IN DOUBT ASK

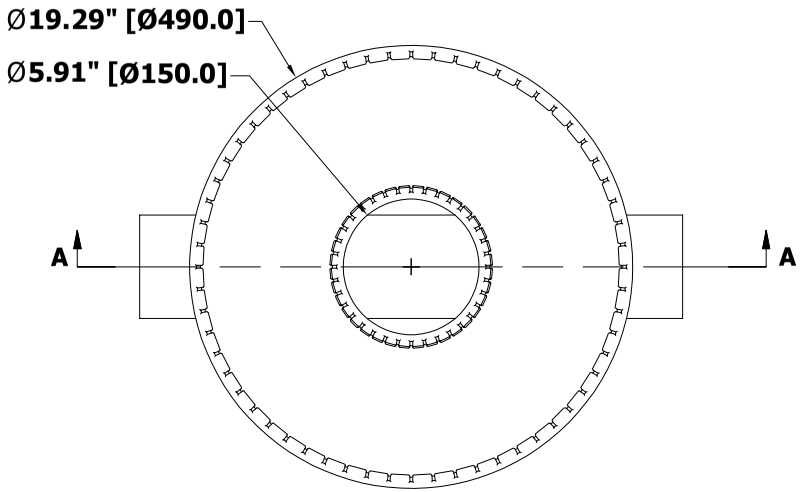

TOP VIEW

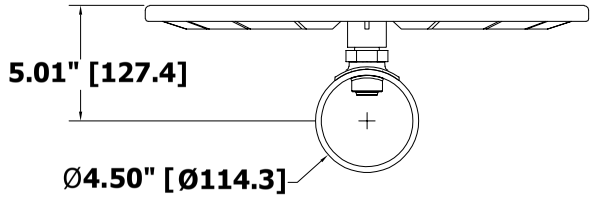

SIDE VIEW

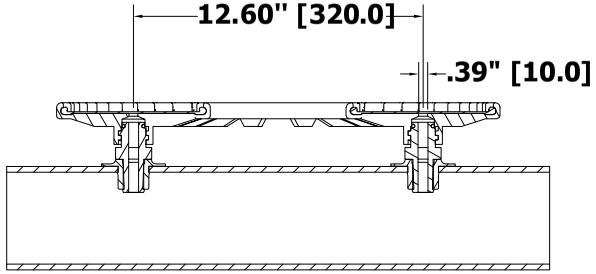

SECTION A-A

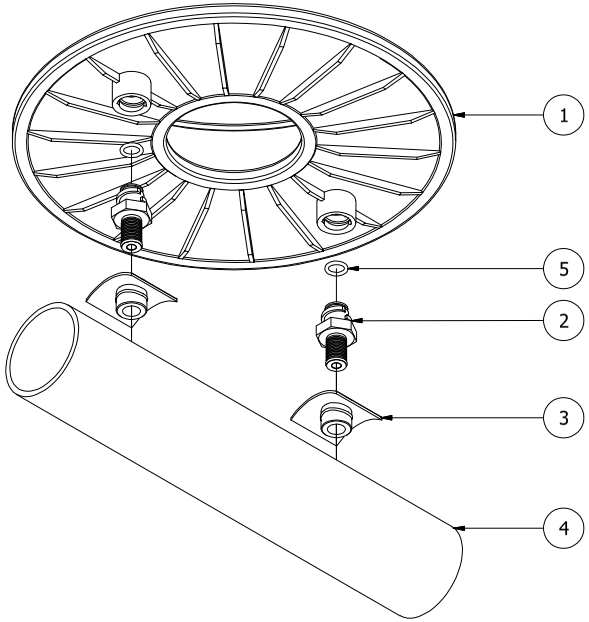

EXPLODED VIEW

PART NO.	PART NAME	MATERIAL	QTY	REMARKS
1	AT490 DISC WITH MEMBRANE	PP BODY / MEMBRANE	1	
2	CONNECTOR	ACETYL	2	
3	GROMMET	PVC	2	
4	PIPE	PVC	1	
5	O RING	RUBBER	1	

Title: ECD 500 DISC DIFFUSERS

SSI AERATION
4 Tucker Drive, Poughkeepsie, NY 12603 USA.
Web: www.ssiaeration.com
Tel: +1- 845-454-8171 Fax: +1- 845-454-8094

Designed By: SI Kang

Drawn By: M. Kranthi

Dwg. No: ECD500 WITH FITTINGS

SCALE: NTS

SHEET NO.1