ECD350 DISC DIFFUSER

Please do not scale from this drawing. The information contained in this drawing is copyright and may not be used, in whole or in part, without the express permission or SSI

IF IN DOUBT ASK

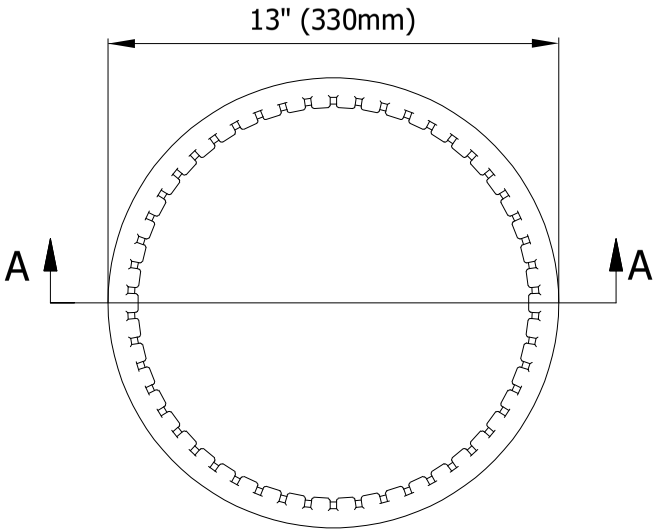

TOP VIEW

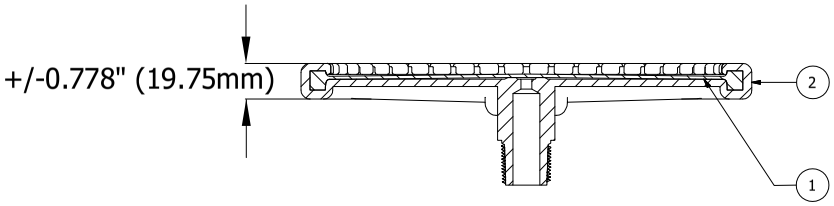

SECTION A-A

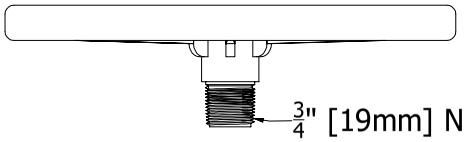

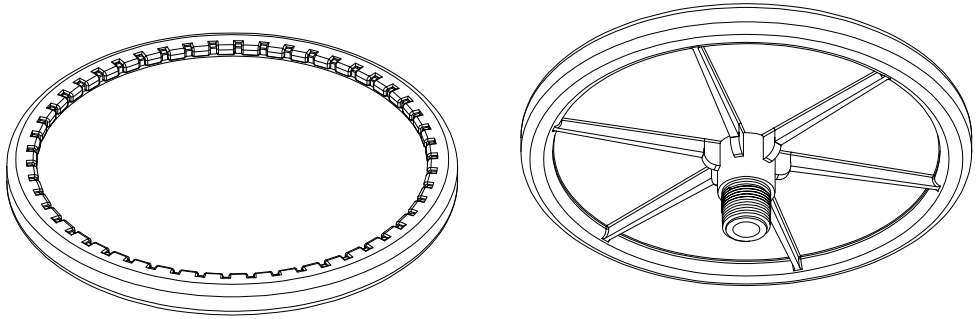

ISOMETRIC VIEWS

PART NO.	PART NAME	MATERIAL	QTY	REMARKS
1	MEMBRANE	EPDM	1	
2	DIFFUSER BASE	POLYPROPYLENE	1	

Title: ECD 350 DISC DIFFUSERS

SSI AERATION
4 Tucker Drive,
Poughkeepsie, NY 12603 USA.
Web: www.ssiaeration.com
Tel: +1- 845-454-8171 Fax: +1- 845-454-8094

Designed By: SI Kang

Drawn By: M. Kranthi

Dwg. No: ECD350

SCALE: NTS

SHEET NO.1