ECD270 DISC DIFFUSER

IF IN DOUBT ASK

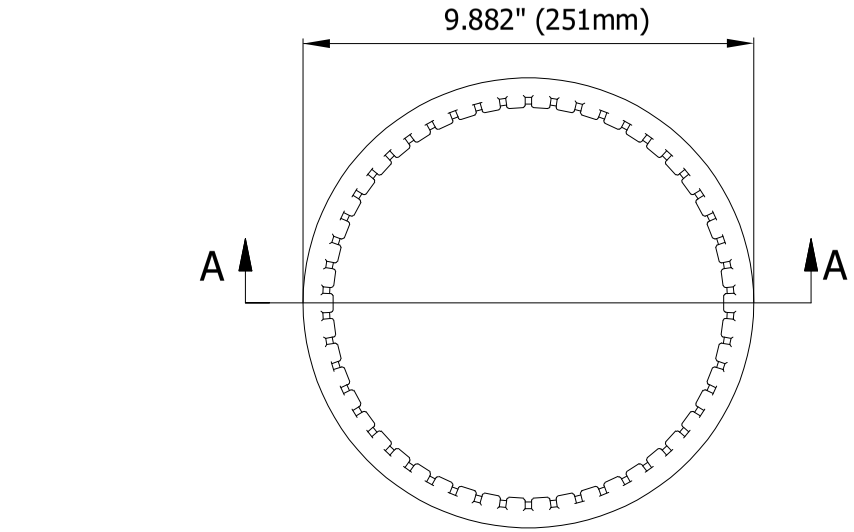

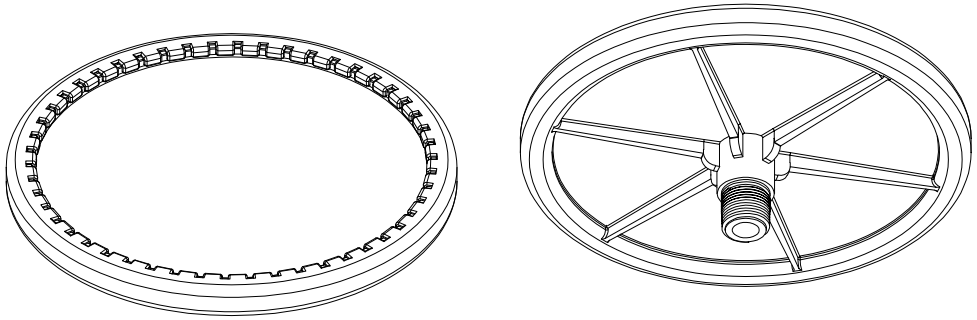

ISOMETRIC VIEWS

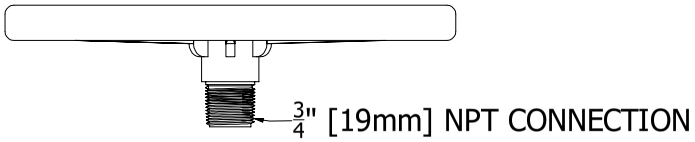

PART NO.	PART NAME	MATERIAL	QTY	REMARKS
1	MEMBRANE	EPDM	1	
2	DIFFUSER BASE	POLYPROPYLENE	1	

Title: ECD 270 DISC DIFFUSERS

SSI AERATION
4 Tucker Drive,
Poughkeepsie, NY 12603 USA.
Web: www.ssiaeration.com
Tel: +1- 845-454-8171 Fax: +1- 845-454-8094

Designed By: SI Kang

Drawn By: M. Kranthi

Dwg. No: ECD270

SCALE: NTS

SHEET NO.1